Vertical Loop

Standard 1.25” - 2 or 3 Pipe Trench

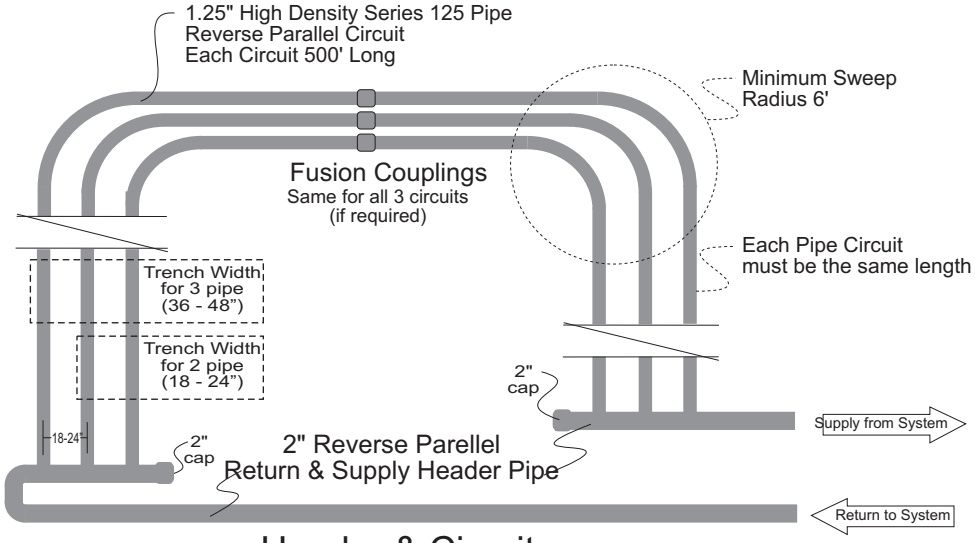

Header & Circuits
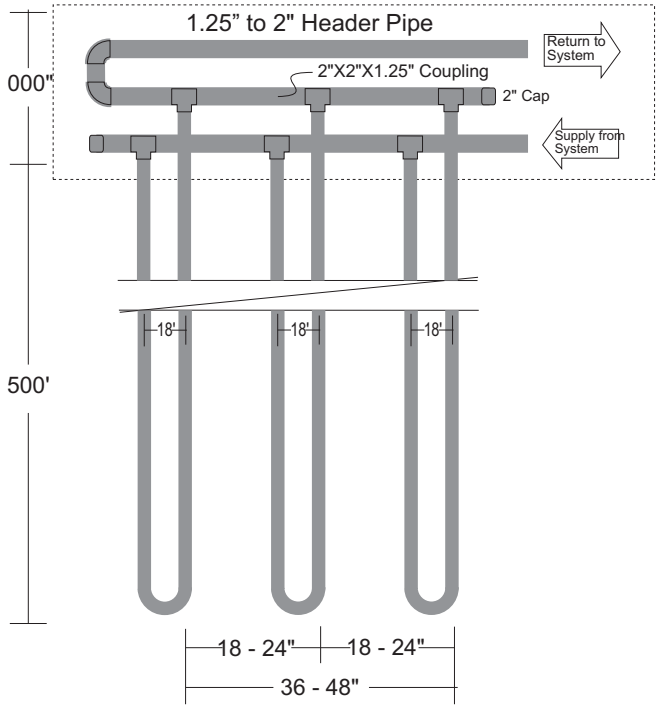
Header & Circuits